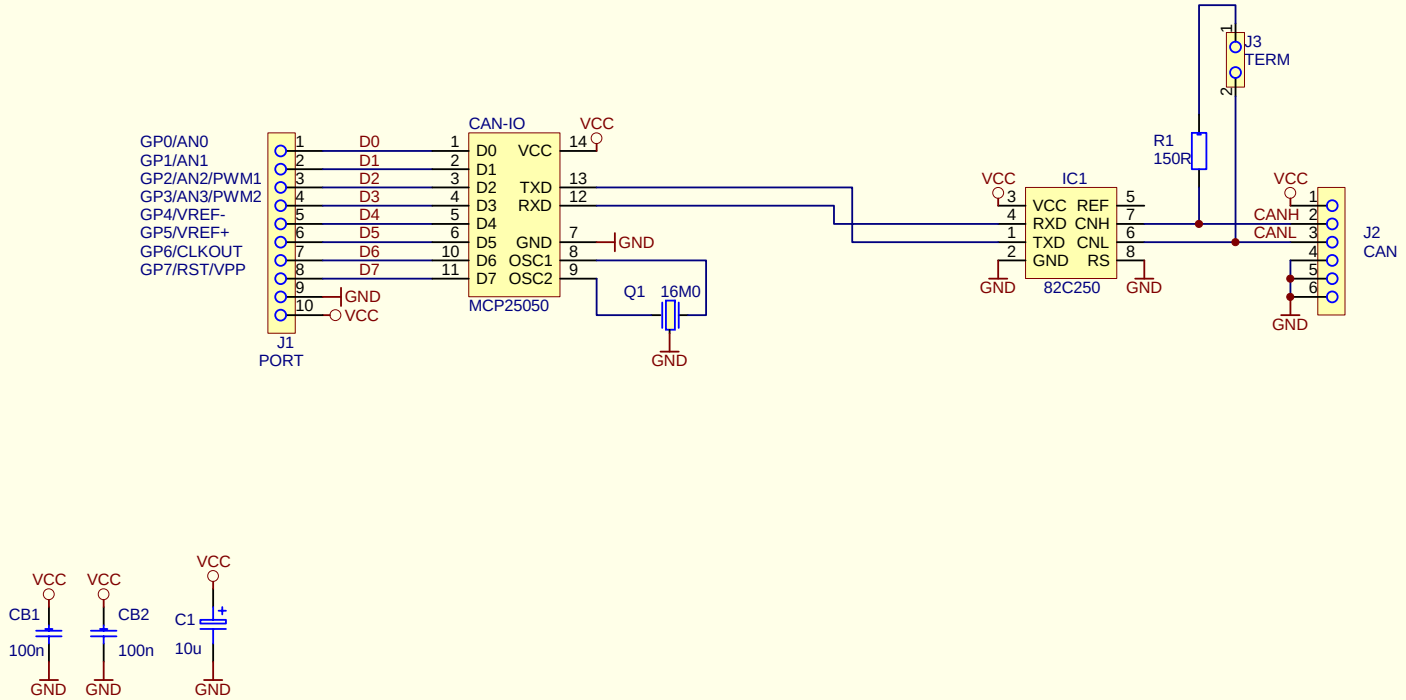


BEF1 BEF2 E-LAB

COMPUTERS
D74906 Bad Rappenau
Tel. 07268/9124-0
Fax 07268/9124-24

# CAN-IO Expander

CAN Evaluation

Copyright by E-LAB

REV 1

Datum: 18-Nov-2003
Name: R. Hofmann

| Rev# | Datum | Rev. | Obj. |
|---|---|---|---|
| | | | |

Blatt 1 von 1