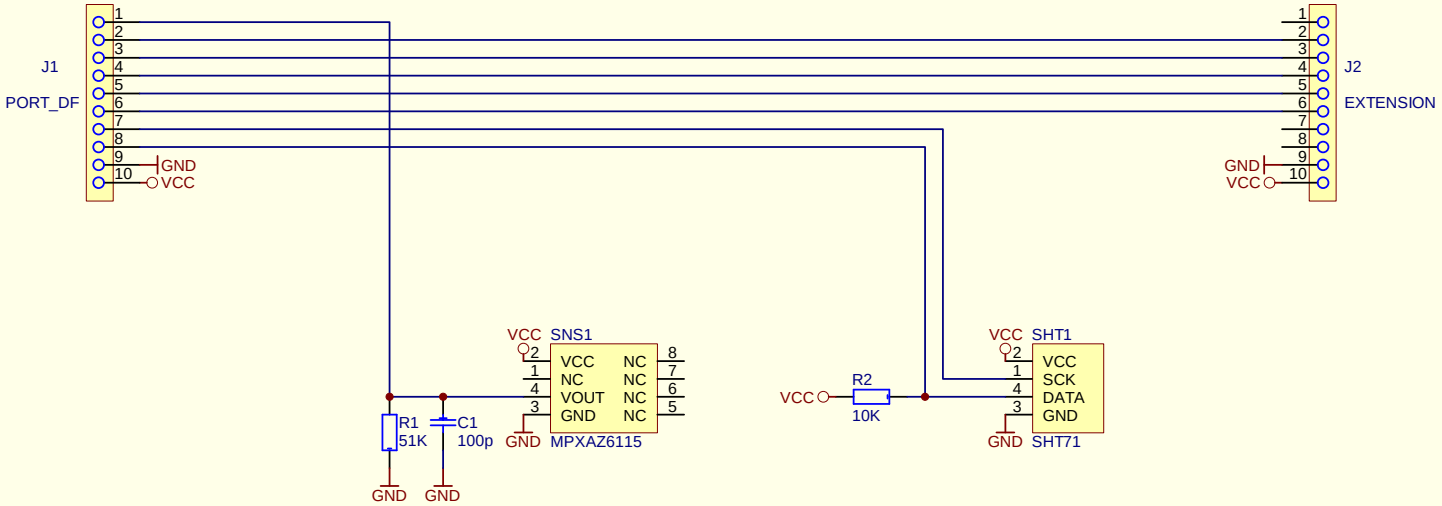

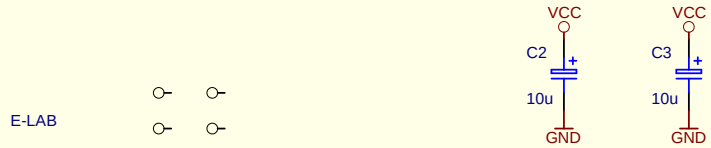

COMPUTERS Tel. 07268/9124-0
D74906 Bad Rappenau Fax 07268/9124-24

Environment Sensors

Temperature + Humidity + Pressure

Copyright by E-LAB rev1

Datum: 27-Jul-2004
Name: R. Hofmann

Rev#	Datum	Rev.	Obj.

Blatt 1 von 1