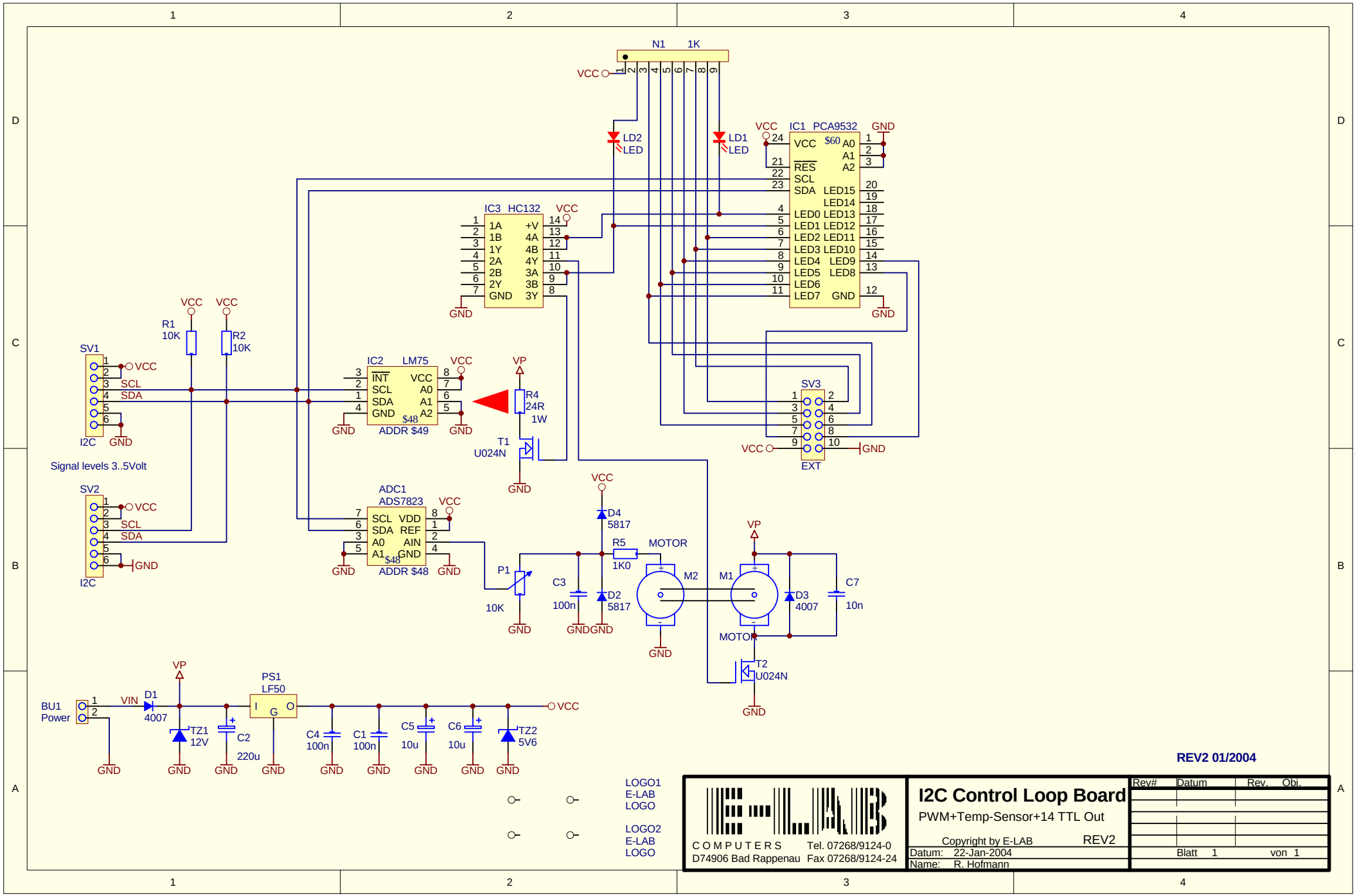
N1 1K
VCC
LD2 LED
LD1 LED
IC1 PCA9532
VCC $60 A0 A1 A2
RES SCL SDA
LED15 LED14 LED13 LED12 LED11 LED10 LED9 LED8
LED0 LED1 LED2 LED3 LED4 LED5 LED6 LED7
GND
IC3 HC132
1A 1B 1Y 2A 2B 2Y GND
+V 4A 4B 4Y 3A 3B 3Y
R1 10K
R2 10K
SV1
SCL
SDA
I2C
Signal levels 3..5Volt
IC2 LM75
INT SCL SDA GND
VCC A0 A1 A2
$48
ADDR $49
VP
R4 24R 1W
T1 U024N
SV3
EXT
SV2
ADC1 ADS7823
SCL SDA A0 A1
VDD REF AIN GND
ADDR $48
P1 10K
C3 100n
D4 5817
D2 5817
R5 1K0
MOTOR
M2
M1
D3 4007
C7 10n
T2 U024N
BU1 Power
VIN
D1 4007
TZ1 12V
C2 220u
PS1 LF50
I G O
C4 100n
C1 100n
C5 10u
C6 10u
TZ2 5V6
GND
LOGO1 E-LAB LOGO
LOGO2 E-LAB LOGO
REV2 01/2004
COMPUTERS
D74906 Bad Rappenau
Tel. 07268/9124-0
Fax 07268/9124-24
I2C Control Loop Board
PWM+Temp-Sensor+14 TTL Out
Copyright by E-LAB
REV2
Datum: 22-Jan-2004
Name: R. Hofmann
Rev# Datum Rev. Obj.
Blatt 1 von 1