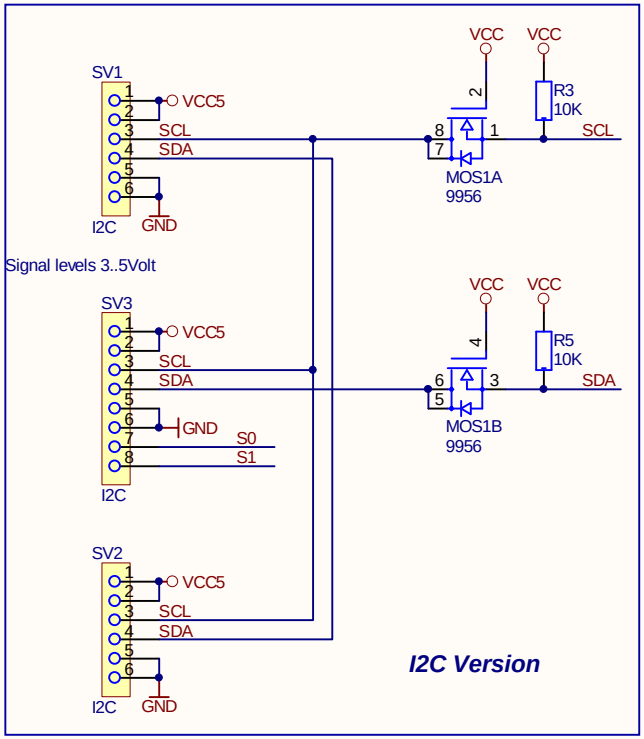

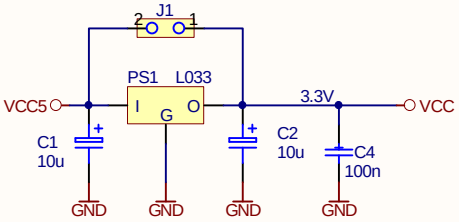

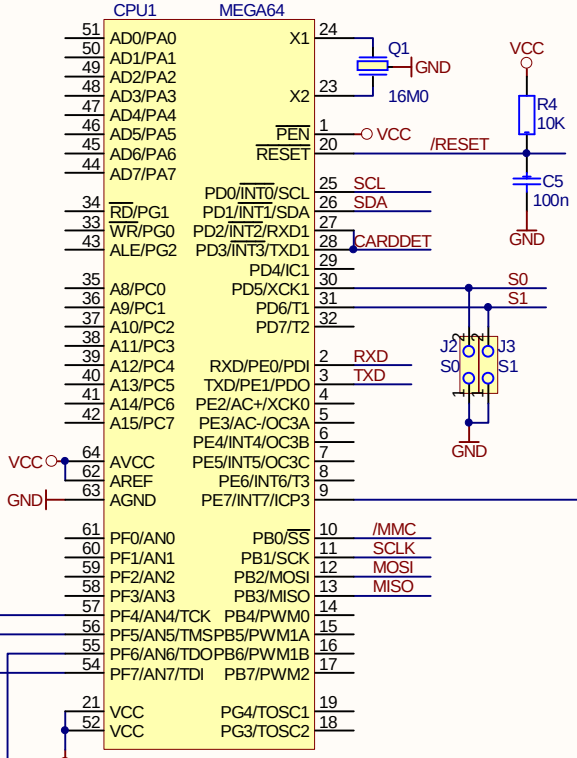

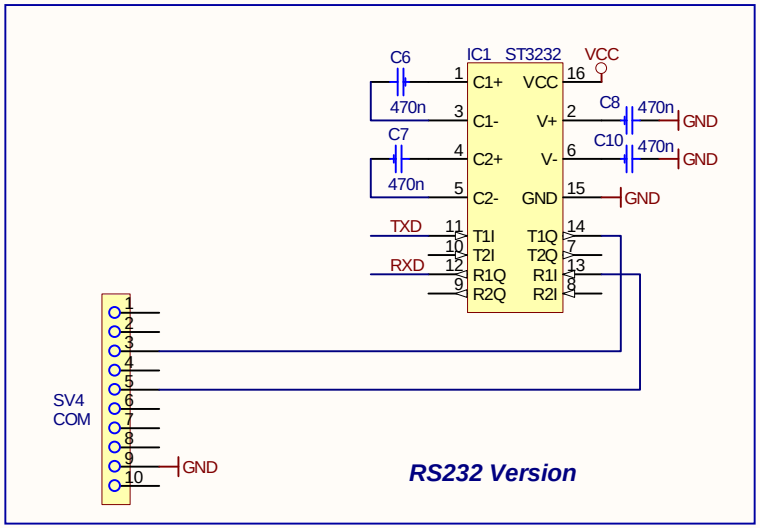

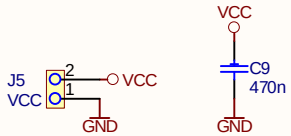

LOGO1
E-LAB
LOGO

COMPUTERS
D74906 Bad Rappenau
Tel. 07268/9124-0
Fax 07268/9124-24

MMC-M64

I2C MMC-Interface MEGA64

Copyright by E-LAB

rev 3

Datum: 05.06.2007
Name: R. Hofmann

Rev#	Datum	Rev.	Obj.

Blatt 1 von 1