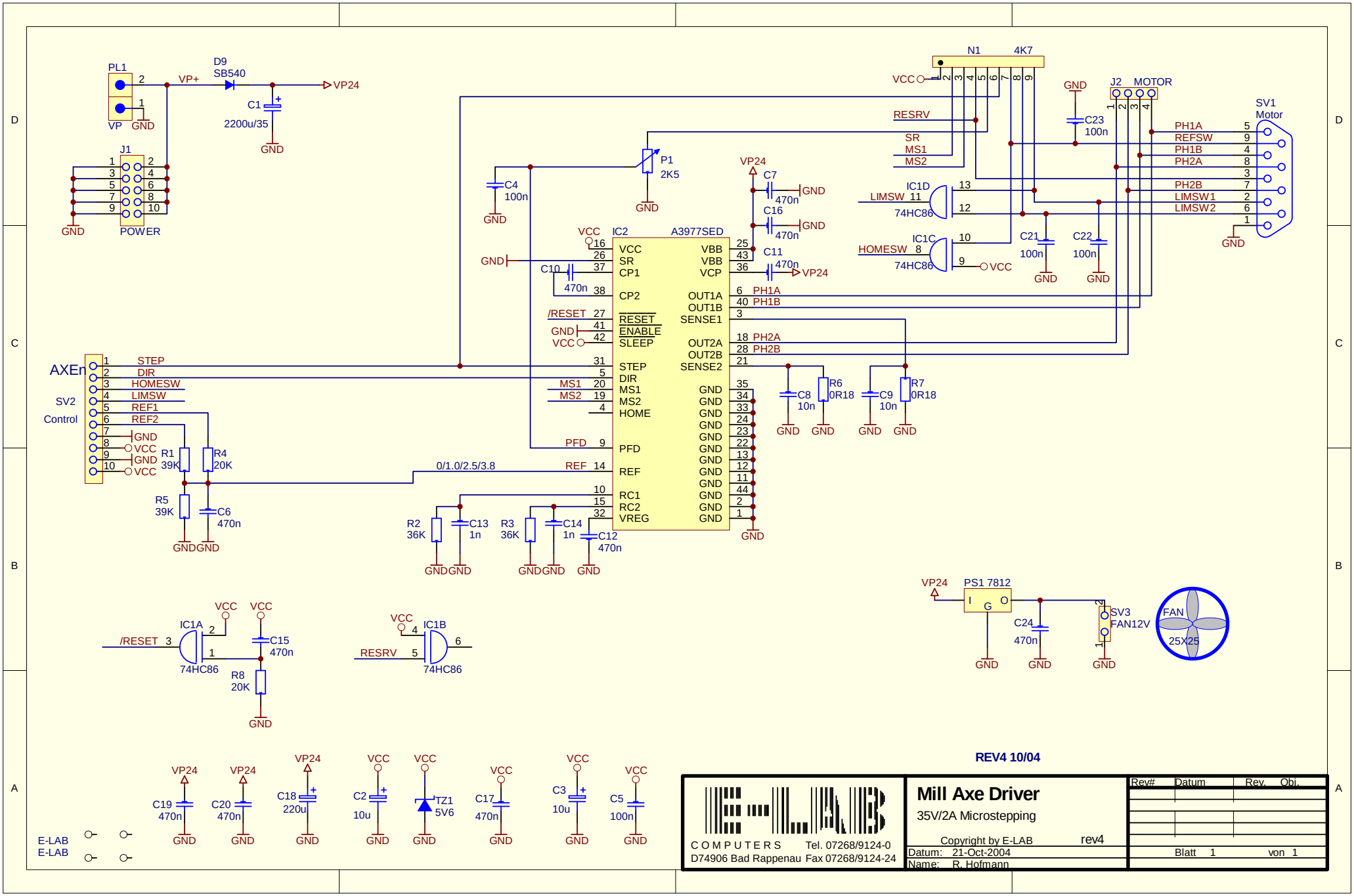
PL1
VP
GND
VP+
D9
SB540
VP24
C1
2200u/35
J1
POWER
N1
4K7
VCC
RESRV
SR
MS1
MS2
J2
MOTOR
C23
100n
SV1
Motor
PH1A
REFSW
PH1B
PH2A
PH2B
LIMSW1
LIMSW2
P1
2K5
C4
100n
IC1D
74HC86
LIMSW
IC1C
HOMESW
C21
100n
C22
100n
C7
470n
C16
470n
C11
470n
IC2
A3977SED
VCC
SR
CP1
CP2
RESET
ENABLE
SLEEP
STEP
DIR
MS1
MS2
HOME
PFD
REF
RC1
RC2
VREG
VBB
VBB
VCP
OUT1A
OUT1B
SENSE1
OUT2A
OUT2B
SENSE2
GND
C10
470n
/RESET
PH1A
PH1B
PH2A
PH2B
C8
10n
R6
0R18
C9
10n
R7
0R18
AXEn
SV2
Control
STEP
DIR
HOMESW
LIMSW
REF1
REF2
R1
39K
R4
20K
R5
39K
C6
470n
0/1.0/2.5/3.8
REF
R2
36K
C13
1n
R3
36K
C14
1n
C12
470n
IC1A
74HC86
C15
470n
R8
20K
IC1B
74HC86
PS1 7812
I
G
O
C24
470n
SV3
FAN12V
FAN
25X25
C19
470n
C20
470n
C18
220u
C2
10u
TZ1
5V6
C17
470n
C3
10u
C5
100n
E-LAB
E-LAB
REV4 10/04
E-LAB
COMPUTERS
D74906 Bad Rappenau
Tel. 07268/9124-0
Fax 07268/9124-24
Mill Axe Driver
35V/2A Microstepping
Copyright by E-LAB
rev4
Datum: 21-Oct-2004
Name: R. Hofmann
Rev#
Datum
Rev.
Obj.
Blatt 1 von 1