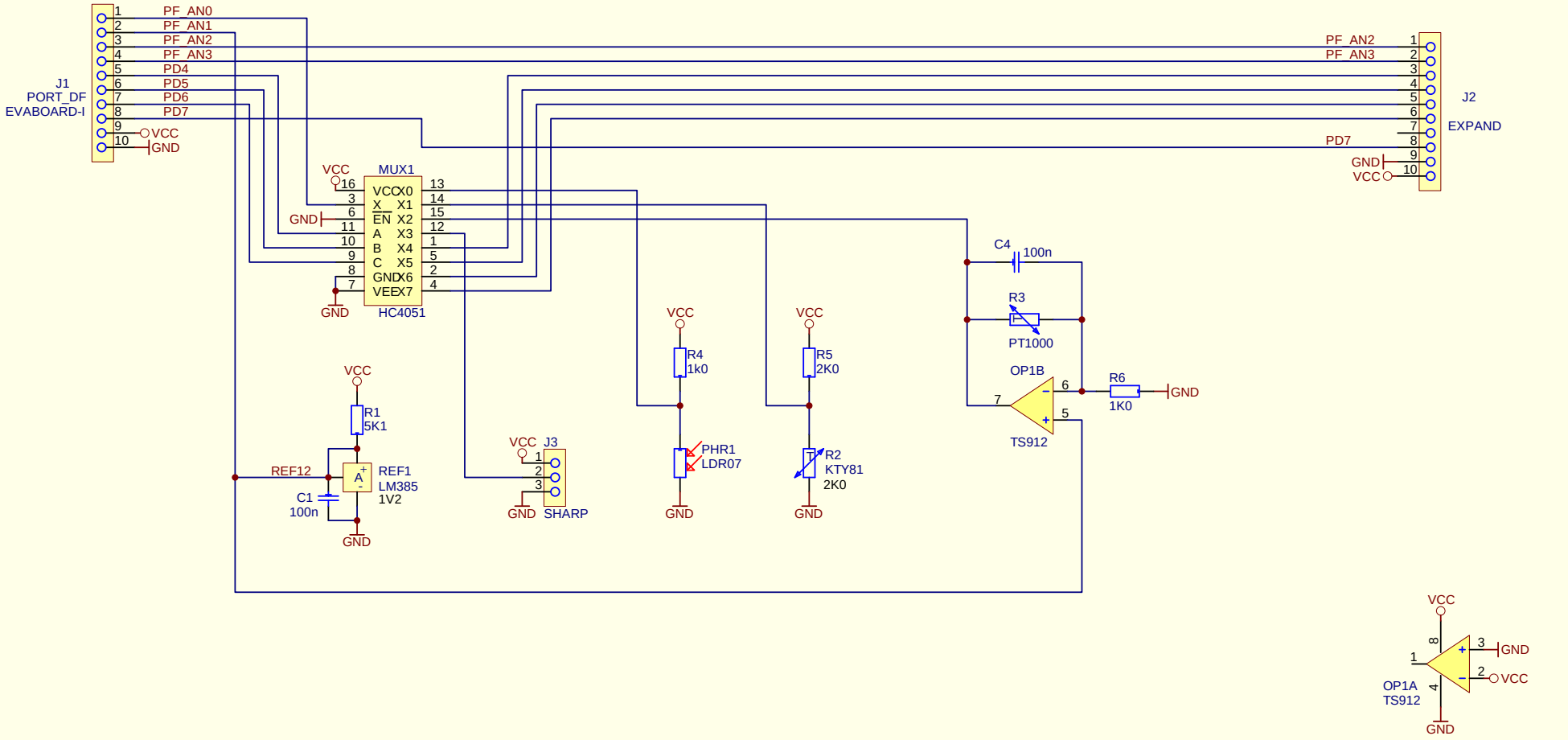


E-LAB COMPUTERS
D74906 Bad Rappenau
Tel. 07268/9124-0
Fax 07268/9124-24

**E-LAB NonLinear Analog**

Non-Linear Sensors

Copyright by E-LAB

Rev1

Datum: 14-Mar-2004
Name: R. Hofmann

| Rev# | Datum | Rev. | Obj. |
|---|---|---|---|
| | | | |

Blatt 1 von 1