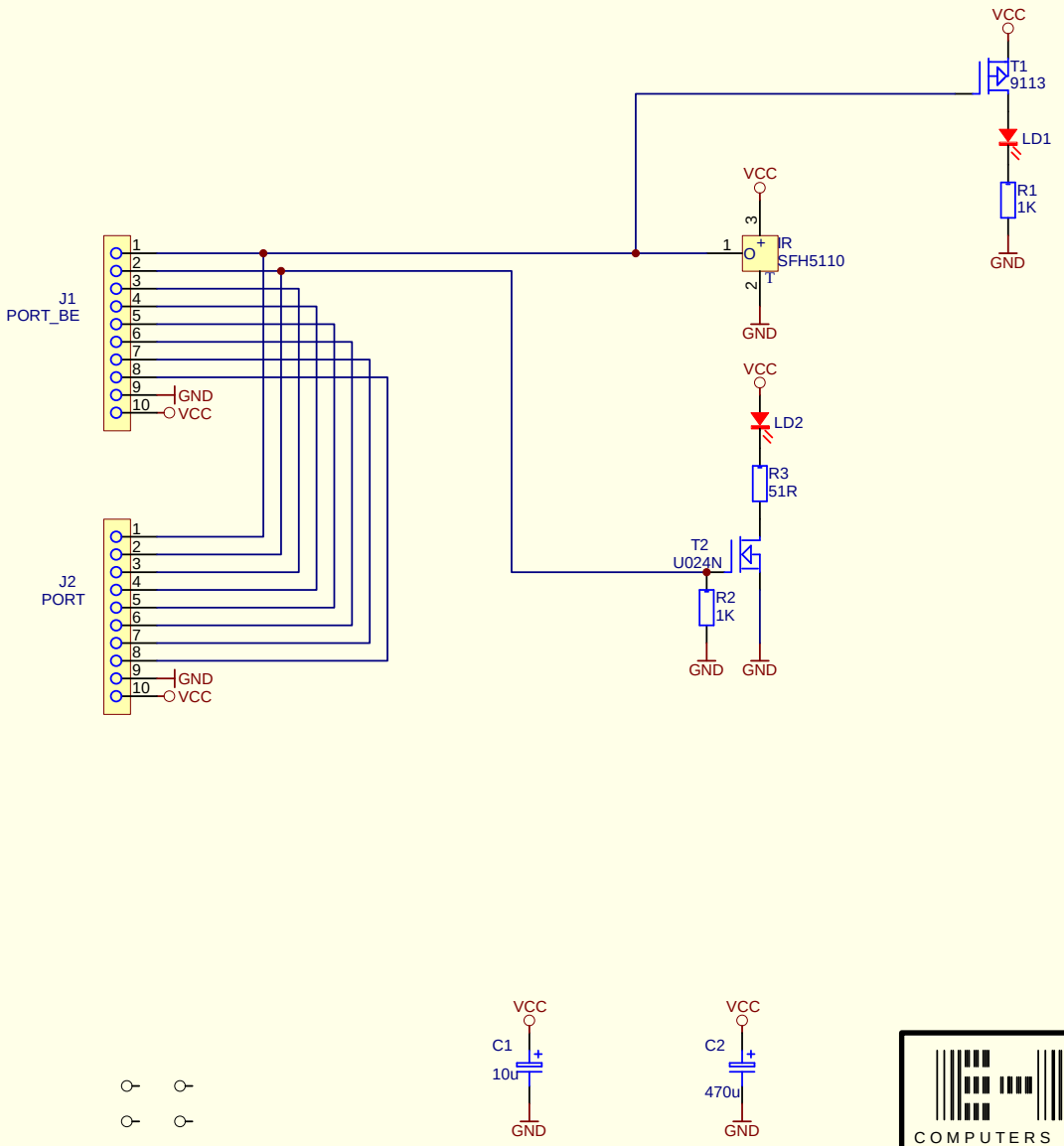

COMPUTERS Tel. 07268/9124-0
D74906 Bad Rappenau Fax 07268/9124-24

RC5 Rx-Tx

RC5 Receiver-Transmitter Demo

Copyright by E-LAB rev1

Datum: 29-Jul-2004
Name: R. Hofmann

Rev#	Datum	Rev.	Obj.

Blatt 1 von 1